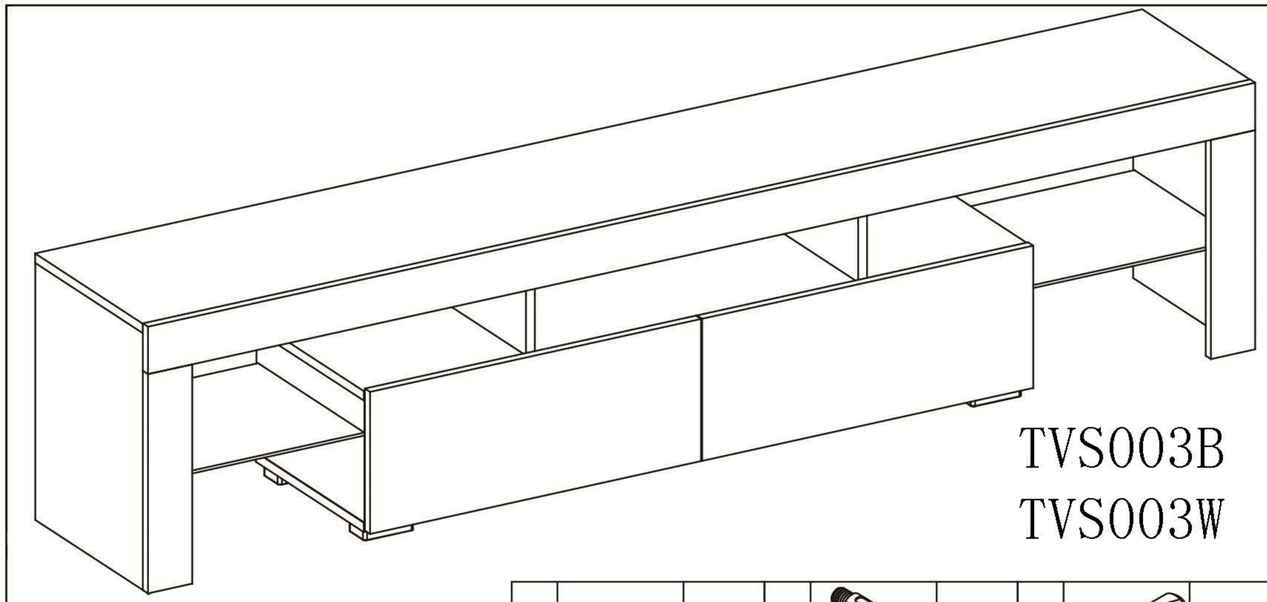

TVS003B
TVS003W

						L	LED	1	A		41	B		24
C		42	D		8	E		6	F		4	G		8
H		5	I	4x25	10	J		4	K					2

1

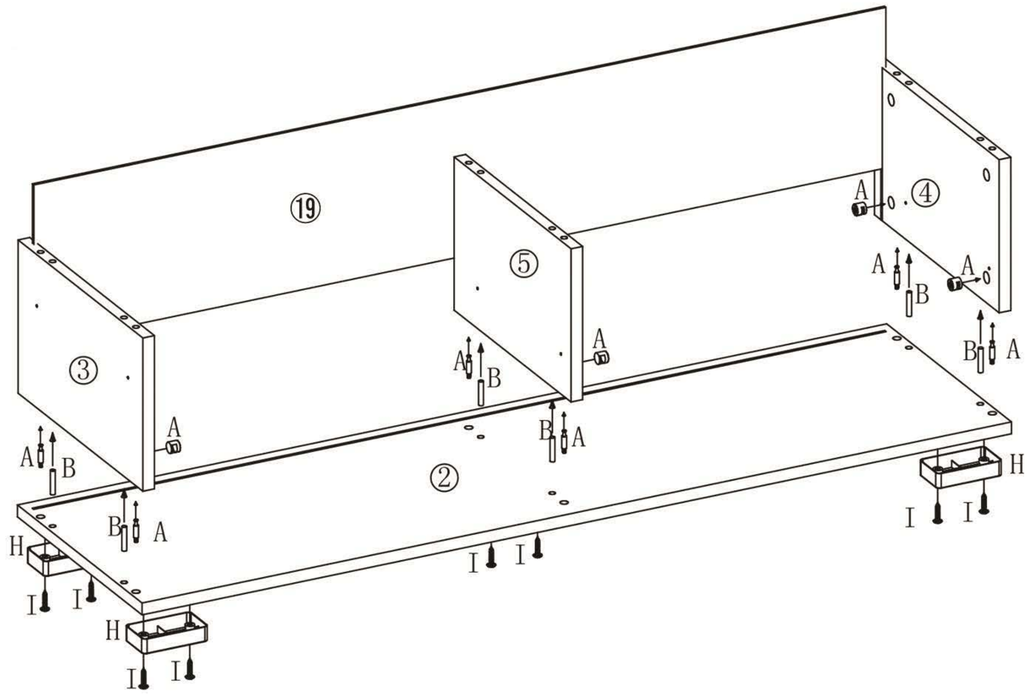

Ax6	Bx6	Hx5	Ix10			

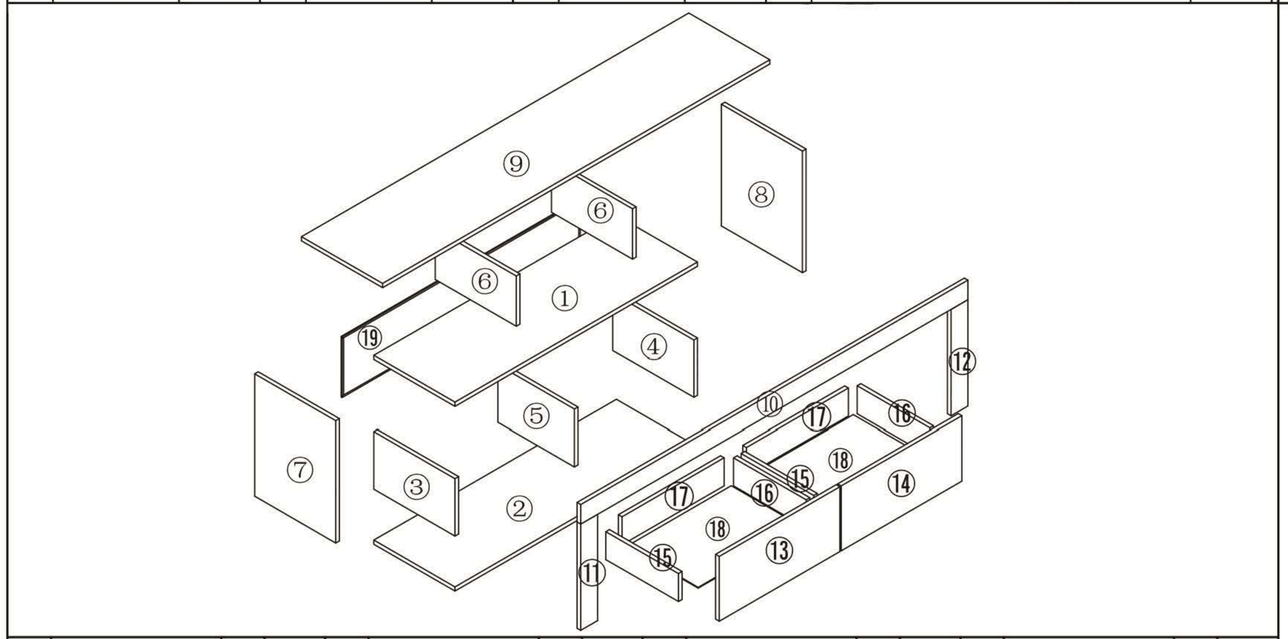

NO.	SIZE	QTY	NO.	SIZE	QTY	NO.	SIZE	QTY	NO.	SIZE	QTY
①	1002x335x15	1	⑥	180x335x15	2	⑪	380x70x15	1	⑯	300x108x15	2
②	1002x335x15	1	⑦	435x335x15	1	⑫	380x70x15	1	⑰	423x108x15	2
③	205x335x15	1	⑧	435x335x15	1	⑬	500x240x15	1	⑱	295x433x3	2
④	205x335x15	1	⑨	1600x335x15	1	⑭	500x240x15	1	⑲	980x215x3	1
⑤	205x316x15	1	⑩	1600x70x15	1	⑮	300x108x15	2			

2

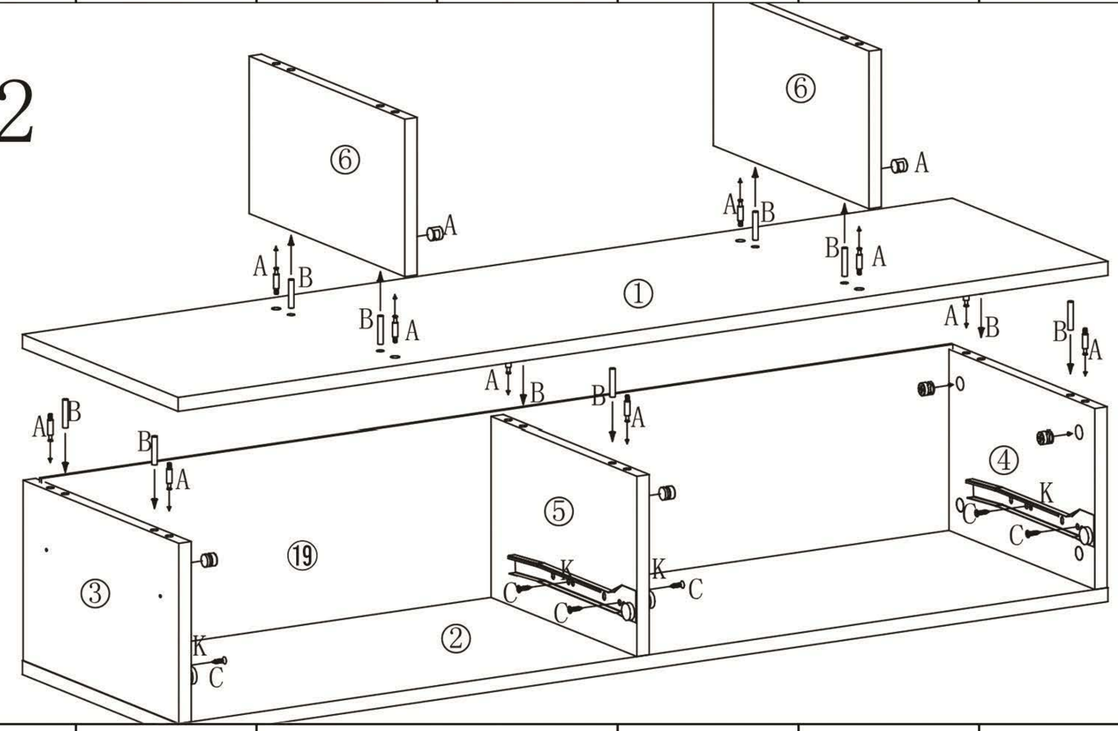

Ax10	Bx10	Kx2	Cx8		

3

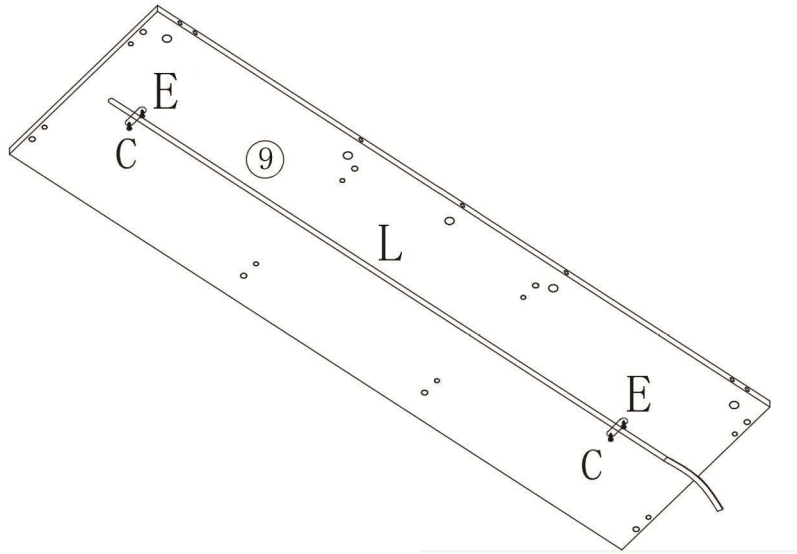

Cx4	Ex2	Lx1				

5

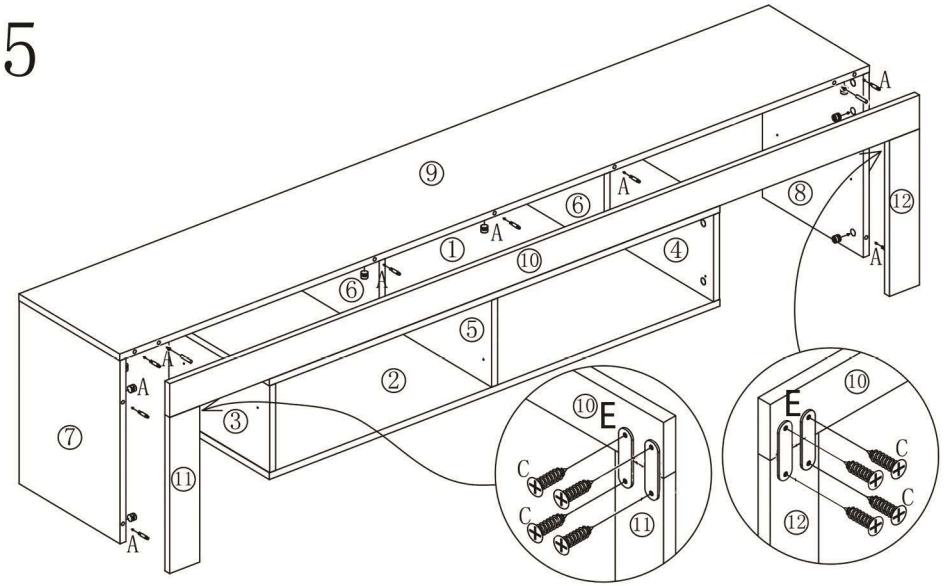

Ax10	Ex4	Cx8				

4

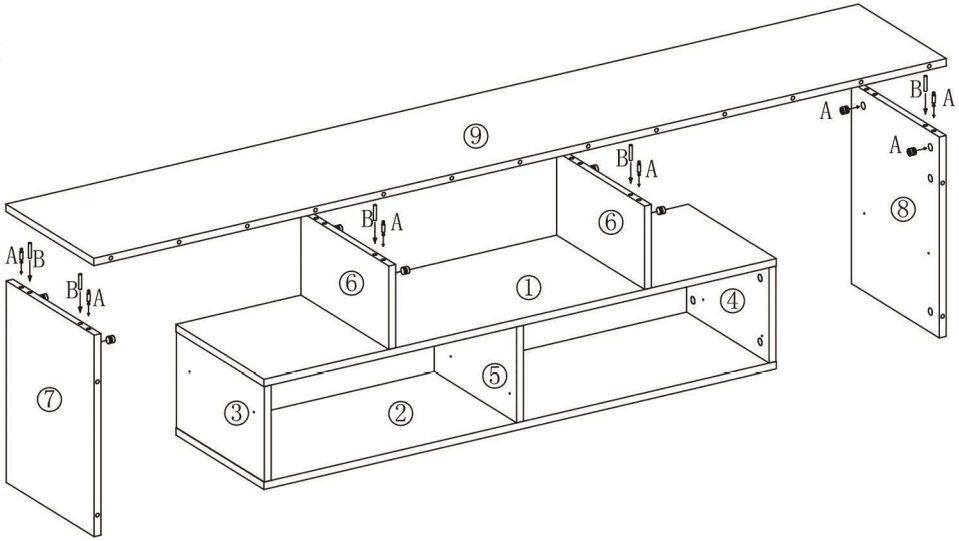

	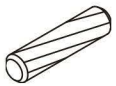					
Ax8	Bx8					

6

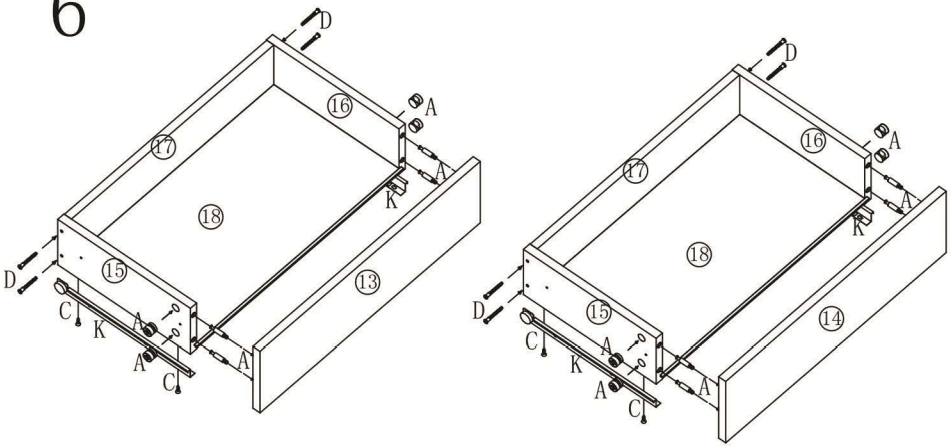

			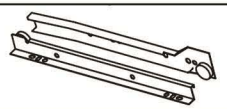			
Ax8	Cx8	Dx8	Kx2			

7

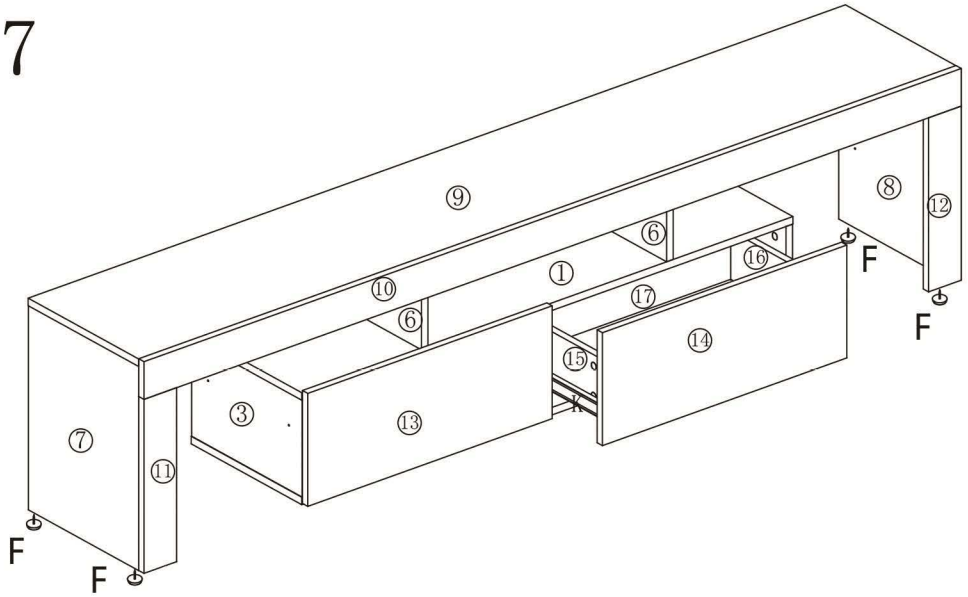

Fx4						

8

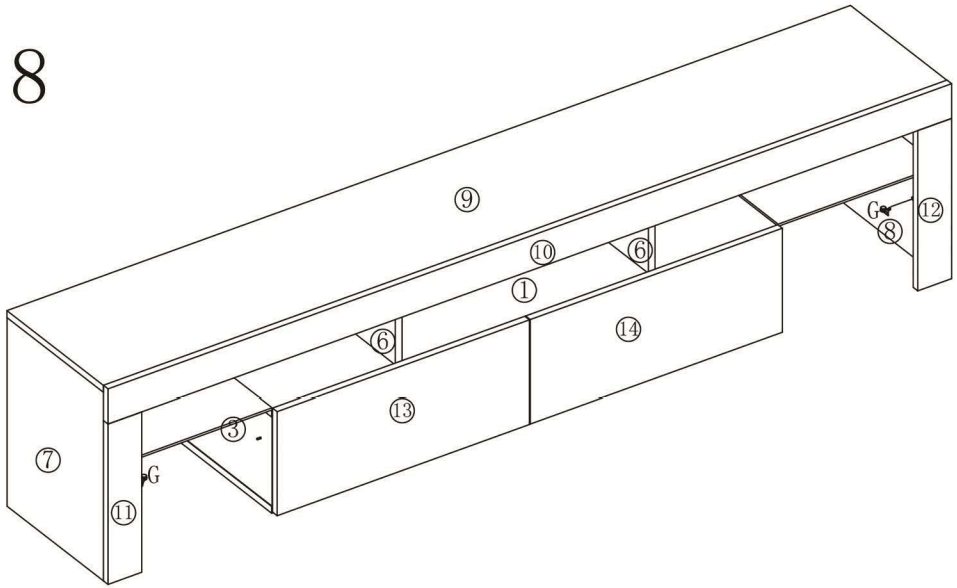

Gx8	Cx8					

LED light

If you can't let the lights work successfully, please check the following:

1. Please check the direction of the connect, try it in the opposite direction, according to the following picture.

2. Please check the remote control, it need you to tear down the plastic septum before use it.
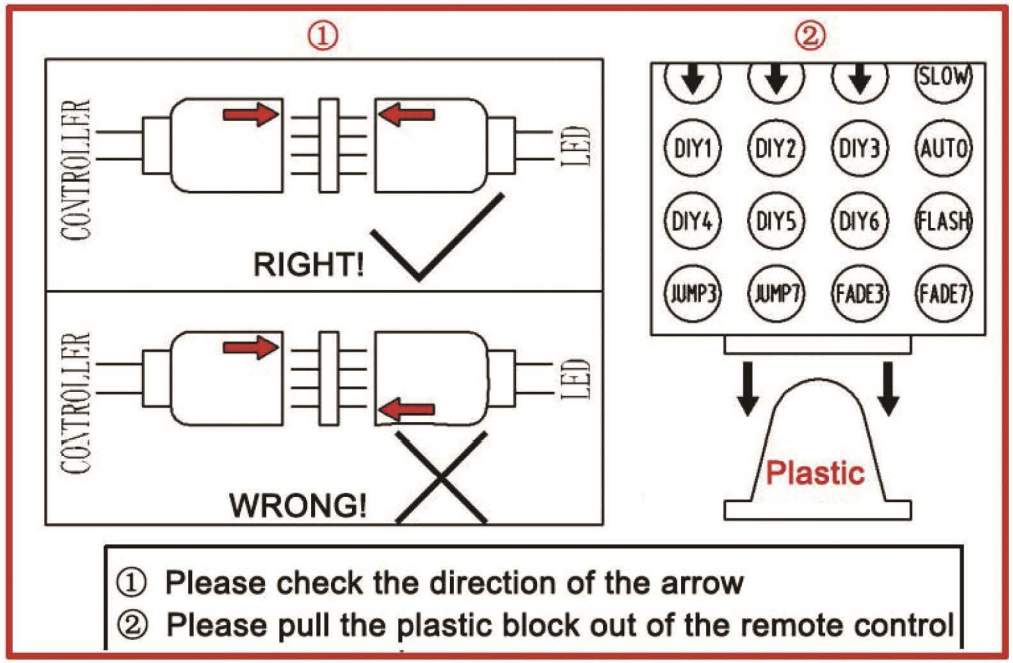
3. Don't let the remote control too far from the receiver, make sure there is no obstruction between them.